DAVIS BOWEN & FRIEDEL, INC.

ARCHITECTS • ENGINEERS • SURVEYORS

Michael R. Wigley, AIA, LEED AP
W. Zachary Crouch, P.E.
Michael E. Wheedleton, AIA, LEED GA
Jason P. Loar, P.E.
Ring W. Lardner, P.E.
Jamie L. Sechler, P.E.

ADDENDUM NO. 1

STEPHEN DECATUR PARK COMFORT STATION
TOWN OF BERLIN
WORCESTER COUNTY, MARYLAND
DBF #0050A115
September 14, 2022

The following revisions are hereby made part of the Contract Documents. Unaltered provisions of the Bidding Documents shall remain in effect. Unless specified otherwise, material and work required by this Addendum shall conform to the requirements of the original Bidding Documents. Failure to acknowledge receipt of this Addendum on the Bid Form may subject the bidder to disqualification.

This Addendum (6 pages), meeting minutes (3 pages), supplemental drawing ADD1 SK1 9-13-2022 (1 page), specification sections 013300 (6 pages) & 072700 (1 page), Halsey Taylor equipment specification (3 pages), revised page 6 of issued RFP (1 page), and revised drawing sheets A1.1 & C.1 (2 sheet), totals 23 pages.

I. GENERAL

1. The attached Pre-Bid Meeting Minutes shall become a part of the Contract Documents.

II. QUESTIONS & RESPONSES

1. Please confirm floor finish for all rooms is exposed concrete slab.

a. Yes, the concrete slab will be exposed and is to be sealed.

2. Please confirm location/routing of electric service to the new building, does not appear to be shown on any site plans.

a. The Town will run a new electric service from the secondary pedestal shown on sheet C.1 to the vicinity of the building. This will act as a temporary and eventual permanent service. Please review the note on C.1 'Town is responsible for providing power to the building meter. Contractor is responsible for all remaining power and electric.'. The Town shall coordinate this work with the Contractor during construction.

3. **No specification is provided for paint- the steel lintels above the doors/windows/louvers are indicated to be painted, also assuming the hollow metal doors/frames will be painted.**
   a. Exterior Steel Substrates:
      Water-Based Epoxy Coating System (MPI Gloss Level 6):
      i. Prime Coat: Acrylic Primer, MPI #134 Basis of Design SW Pro-Cryl Universal Primer
      ii. Intermediate Coat: Same as topcoat.
      iii. Topcoat: Water-based epoxy, MPI #115 Basis of Design: Waterbased Catalyzed Epoxy

4. **Please confirm specification for air/vapor barrier / bldg wrap indicated on the plans.**
   a. Please refer to the attached Specification Section 072700 – AIR & VAPOR BARRIER.

5. **What is the anticipated schedule for the project?**
   a. Bids will be opened on September 28th, a letter of recommendation will be provided to the Town prior to October 11th. The Town anticipates awarding the contract at the October 11th Mayor and Council Meeting. Notice to Proceed will be determined based on the Contractors schedule for acquiring materials.

6. **Referencing sheet C.1 Curb Stop And Meter Assembly Detail and the Plumbing Series of documents. It is stated in note #2 of the Curb Stop And Meter Assembly Detail that fire service shall be provided separately and the plumbing drawings per sheet P0.1 make mention of a sprinkler and flow tamper switch. I do not see any code in the documents indicating a fire suppression system is required here (Note: Typically NFPA 13 is utilized in this case). Can you please confirm there is no requirement for a fire suppression system. If it is required please provide where the riser pipe will need to be brought in and if a fire pump and if any other requirements are necessary.**
   a. This project does not require a fire suppression system.

7. **Referencing specifications section 0133000-1 and the test pits is there a certain amount of test pits you require? A project of this size should not require more then (2).**
   a. We agree that (2) test pits will be sufficient for this size of project, any additional test pits required will be considered under the contingency Bid Item #4 of the Bid Form.

8. **Referencing sheet 013300-4 item 3.7. This section states we need to adhere to Davis-Bacon Pay Roll Procedures. Please confirm this is not applicable and this project is not wage scale.**
   a. No wage rates are required for this project. This project does not require adherence to Davis-Bacon Pay Roll Procedures. Please find attached Specification Section 013300, revised accordingly.

9. **Referencing specifications section 042200-2 Section 2.2 Subsection E and architectural sheet A3.1 detail 011 and the specification of (4) inch Split Faced Solid CMU and (4) inch Ground Faced Solid. Is it your intent to have the decorative CMU block any where as mentioned in the aforementioned specification section, if so where?**
   a. The ground face concrete unit is specified in Section 042200, 2.2, E, 4a. The split face concrete unit is specified in Section 042200, 2.2, E, 4b. Please see Sheet A2.1 'Building Elevations' for the usage of the 4" Split-Faced and Ground-Faced CMU blocks.

10. **Referencing specifications section 076200-6 section 3.2, item C, C.1 and sheet A2.1 detail 013. The downspouts appear to be dumping on to grade. I am assuming you want them to dump on grade without a splash block since it would be a trip hazard and that it being routed to a storm drainage system is not applicable.**
   a. There is no requirement for splash blocks, there is a concrete walk around the entire building, sloped away from the building.

11. **Referencing specifications section 073113-1, section 1.3 and item C. It states provide a sample of warranties, but after reviewing the documents I do not see any specific warranties stated. Is there any special warranty you are looking for?**
   a. See Section 073113, Part 1, 1.6 Warranty, A. Special Warranty, Items 1, 2, & 3.

12. **Referencing specifications section 001116-1 and the RFP page (6) of (11), please confirm for contractual purposes that we are permitted to submit the bid via email at the specified time.**
   a. Yes, bidders are permitted to submit the bid via email at the specified time, however, please review the following excerpt from the attached revised RFP page (6) of (11);

   Printed and electronic or email submittals will be accepted. Regardless of the delivery method, it is the responsibility of the bidder to ensure delivery by the deadline.

   - *If printed, the Town encourages double-sided printing where appropriate. Complete submission should not exceed 20 sheets of paper and must be in a sealed envelope addressed to*
     Town of Berlin RFP 2023-04
     Attn: M. Bohlen, Acting Town Administrator
     10 William Street
     Berlin, MD 21811

   - *If electronic (via USB drive), USB must be clearly labeled: "TOB RFP 2023-04"*
   - *If via email, send to mbohlen@berlinmd.gov with the subject "RFP 2023-04 Stephen Decatur Park Comfort Station Project".*

13. **Referencing specifications section 002113-1, we are required to provide a P/P bond. Are we also required to provide a bid bond?**
    a. Only a Performance Bond is required for this project. Bid Bond and Payment Bond are not required for this project.

14. **Referencing specifications section 007200-8 Special Hazards Insurance. If we are to run into a hazardous material that is unforeseen, will be issued a change order for the insurance and scope of work?**
    a. Yes, if hazardous material is encountered a change order will be appropriate. It is not anticipated that any hazardous material will be encountered.

15. **Referencing specifications section 007200-17 item 28 and 012000-2 Section 2.1 Item B. Who will be paying for the building city/county permits?**
    a. The awarded Contractor will be responsible for submitting Permit application(s) necessary for obtaining Town of Berlin and Worcester County, MD permits associated with the project, including from the Worcester County Fire Marshal's office. The Permit and review fees associated with the project will be borne by the Town of Berlin. Building plans will be supplied by the Town of Berlin.

16. **Referencing 007200-8 Section E. Would it be reasonable to ask the city to pick up the builder's risk? Due to this project being on public grounds that are accessible to theft and vandalism, we would prefer the city to assume this item. (Note: There is only so much protection orange barrels or temporary fencing can provide and would be an additional logistical issue for the G.C)**
    a. No, the Town will not be willing to assume the Builder's Risk Insurance. Please note that the awarded Contractor will not be allowed to store unsecured materials on site. The Town will assist in providing a secure location offsite if needed.

17. **Referencing the RFP page (5) of (11), in today's economic climate due to labor shortage and volume of work. Are we bound to use the subcontractors we are listing in the bid submittal?**
    a. If circumstances require a change of subcontractors, the awarded Contractor should notify the Town and Engineer of the change in writing.

18. **General Question: Are our subcontractors required to be bonded?**
    a. No, subcontractors shall be licensed and insured, but they are not required to be bonded.

19. **Referencing sheet A3.1 detail 011 and sheet A3.2 detail 010, can we get a dimensional size of the Pre-Cast Sill?**
    a. Please see the attached ADD1 SK 1 dated 9/13/2022

20. **Referencing sheet A3.1 do you require any damp proofing below grade on the CMU assemblies?**
    a. Damp proofing is not required. There is a vapor barrier called for under the slab on Drawing A1.2 in the Structural Notes. The VB should be a Class A as specified

in ASTM E1745.

21. Referencing the mechanical series of drawings, what manufacturer of louver do you require.

a. See Window and Louver Schedule on Drawing A1.1 for Louver Make and Model.

22. Please clarify if the new building location will be staked out/prepared by the county including the excavation and final grading as drawing sheet C.1 states that the town will be responsible for final grading, reseeding and restoration.

a. The building corners will be staked by the Town Engineer (DBF). Excavation for the building foundation and backfill/rough grading shall be the responsibility of the Contractor. The Town will perform final topsoil grading and seeding.

23. Please clarify what work is to be performed by the town/county, there were notes on C.1 that had led us to the understanding that the sitework and site utilities will be performed by the Town however the specifications do not speak to this.

a. Town of Berlin personnel will be responsible for installation of the water service from the existing main to the edge of the proposed sidewalk; the connection from the existing sewer main and including the proposed building cleanout; power to the building meter; and final site grading and seeding for restoration.

24. Please confirm that the Town will furnish and install the new concrete sidewalks in their entirety as the site plan states the proposed 4" Sidewalk is to be by the town, however the RFP calls for the GC to include both the concrete and the new asphalt transition.

a. The Town will not furnish and install the new concrete sidewalks, the Contractor is to include all new site concrete work and the new asphalt transition. Please see the attached sheet C.1 with a revised 'Sidewalk Tie-in Detail'.

25. Per corrected RFP page 6, it states bids can be submitted via email to mbohlen@berlinmd.gov for "RFP 2023-04 William Street Pump Station Upgrade Project". Please confirm bids can also be send via email to mbohlen@berlinmd.gov for "RFP 2023-04 Stephen Decatur Park Comfort Station".

a. All submissions should be labeled as "RFP 2023-04 Stephen Decatur Park Comfort Station". Please see attached page 6 of the RFP reflecting this correction.

26. Please clarify if the GC is to provide the new site concrete for this project and if so, to what extent? The drawings on Cx.1 show the 4" concrete sidewalk to be by the town in detail "Sidewalk Tie-In Detail" however it appears that per the "Site Plan" and "Sidewalk Detail" seem to convey that this work is to be done by the GC.

a. The Contractor is to provide all new site concrete for the sidewalk and building for this project.

27. Please clarify if this project is to include prevailing wages / wage scale.
a. This project does not include any prevailing wages/wage scale.

28. Please provide a model # or specifications for the new Exterior Rated Drinking Fountain as there is no model provided on the current Plumbing Fixture Schedule (ref. P0.2)
a. Halsey Taylor Model HTHBHVR8BLR-NF. Please see the attached Halsey Taylor Specification Sheet.

29. Please confirm there are to be no MBE goals associated with this project.
a. There are no MBE requirements associated with this project, however, please note item #9 of the attached Pre-bid meeting minutes.

30. Will metal stud framing be an acceptable means of construction in lieu of wood stud framing?
a. No, metal stud framing is not acceptable.

31. Please provide clarification as to what items will be covered/performed by the Town.
a. Town of Berlin personnel will be responsible for installation of the water service from the existing main to the edge of the proposed sidewalk; the connection from the existing sewer main and including the proposed building cleanout; power to the building meter; and final site grading and seeding for restoration.

32. Please confirm submission should not exceed 20 sheets of paper only if submitted in a hard copy. USB Drives and Emails do not have a page limit.
a. This statement is correct, USB Drives and Emails do not have a page limit.

33. The RFP contains a Cost Proposal, Proposed Subcontractor page, and signature page. The specifications Contains a bid form with the cost proposal page and similar signature information included. There is no proposed subcontractor page in the specifications. Please advise if we are to use the forms from the RFP or from the specifications.
a. Bidders should use and submit the forms provided in the RFP.

34. If the Proposed Subcontractors form is needed, or if we use our own format, please confirm if the GC is to provide Tax ID Numbers for Proposed Subcontractors at the time of bid?
a. Tax ID Numbers for the proposed Subcontractors shall be submitted with the Bid.

PLANS

1. Sheet A1.1 has been revised to reflect a change in the locking hardware being proposed.

2. Sheet C.1 has been revised to reflect a change in the 'Sidewalk Tie-in Detail'.

END OF ADDENDUM

DAVIS BOWEN & FRIEDEL, INC.

ARCHITECTS • ENGINEERS • SURVEYORS

Ring W. Lardner, P.E.
W. Zachary Crouch, P.E.
Michael E. Wheedleton, AIA, LEED GA
Jason P. Loar, P.E.
Jamie L. Sechler, P.E.
Michael R. Wigley, AIA, LEED AP

PRE-BID MEETING MINUTES

STEPHEN DECATUR PARK COMFORT STATION
TOWN OF BERLIN
WORCESTER COUNTY, MARYLAND
AUGUST 31, 2022
DBF #0050A115

In Attendance:

Name	Representing	Phone	E-Mail
Mary Bohlen	Town of Berlin	410.641.4143	dengelhart@berlinmd.gov
Jamey Latchum	Town of Berlin	410.641.3845	jlatchum@berlinmd.gov
Jimmy Charles	Town of Berlin	410.641.4001	jcharles@berlinmd.gov
Tim Lawrence	Town of Berlin	410.629.1713	tlawrence@berlinmd.gov
Daniel Ash	GGI Builders	302.752.7857	dash@ggibuilds.com
Jonathan Farmer	Delmarva Veteran Builders	443.205.2327	estimating@delmarvaveteranbuilders.com
John Murphy	Willow Construction, Inc.	443.822.6000	jmurphy@willowconstruction.com
Bill Henley	Henley Construction	240.762.1268	billh@henleyconstruction.com
Joshua J. Taylor, PE	Davis, Bowen & Friedel, Inc.	410.543.9091	jjt@dbfinc.com
John McGee	Davis, Bowen & Friedel, Inc.	410.543.9091	jcm@dbfinc.com

Items of Discussion:

1. Bids are to be received by the Town by **10:00 a.m. on Wednesday, September 28, 2022**. The final day for Bidders to ask questions will be Tuesday, September 13th by 4:30 PM, to allow a final addendum to be issued by Friday, September 16th, by 5:00 PM.

2. An Addendum will be issued to address the following items:

   a. Pre-Bid Meeting Minutes
   b. Bidder Questions

3. The Project consists of the furnishing and installation of a ±170 SF CMU comfort station building consisting of two restrooms, a maintenance room, and associated site work. Scope of work shall include plumbing, mechanical, electric, HVAC, doors, windows, sidewalk, asphalt parking lot transition, and all other work as described in the plans and specifications entitled Stephen Decatur Park Comfort Station, prepared by Davis, Bowen, & Friedel Inc, dated August 2022. Work will take place within the Town of Berlin Property. Refer to the Bid Form for unit price bid items and estimated quantities.

4. Town of Berlin personnel will be responsible for installation of the water service from the existing main to the proposed sidewalk; the connection from the existing sewer main and including the proposed building cleanout; power to the building meter; and final site grading and seeding for restoration.

5. Contract duration is 60 calendar days. Liquidated damages of $400 dollars per day, will be assessed in accordance with the Contract Documents. Please note that the Bid must be remain valid for 90 days.

6. Any materials needing a secure site can be stored on Town property as space allows and as approved by the Town. Accessibility at these sites would have to be coordinated with the Town. Equipment and materials should not be stored at the Park.

7. No Bid Bond is required for this project. A Performance Bond (100%) will be required from the successful bidder for this project.

8. The successful bidder will be required to follow all laws and regulations of the Local, County, State, and Federal government agencies having jurisdiction over the work.

9. The Town of Berlin is an equal opportunity employer. Disadvantaged Business Enterprises (DBE), Small Business Enterprises (SBE), Minority Business Enterprises (MBE), and Women-Owned Business Enterprises (WBE) will be afforded full opportunity and encouraged to submit bids on this contract and will not be subject to discrimination on the basis of race, color, national origin or sex in consideration of this award.

10. Funding for this project is made available through the Town of Berlin wage rates are not a requirement.

11. The Successful contractor shall be responsible for all building inspections required by code. The successful contractor will be responsible for obtaining any additional permitting including, but not limited to, Erosion and Sediment Control for any off-site staging areas.

12. Communication and coordination between the Contractor, Town, and DBF throughout construction is recommended.

13. An RPR inspector will be onsite part-time throughout the project. The Contractor shall give notice to the Town and Engineer 48 hours in advance of all key construction activities. An approved construction schedule shall be required prior to work commencing.

14. Partial payment requests shall be submitted monthly for review. Progress Meetings will be held monthly at Berlin Town Hall.

15. All bidder questions should be submitted through Mary Bohlen, Town Administrator, Town of Berlin and Josh Taylor at Davis, Bowen & Friedel, Inc. in writing.

<u>Town Comments:</u>

16. Ms. Bohlen's advised the contractor's that the site was an active playground, and that site security would be very important.

17. It was discussed that Mayor & Council approval for bid award would be October 10th at the earliest.

18. It was stated that the Town is scheduled to have a walk starting at the Park on November 1st.

Bidder Questions:

19. A question was asked regarding Temporary water and electric service for the site during construction.
Response: Water and electric are in close proximity to the project site and the Town will assist the contractor with temporary service.

20. A question was asked regarding the use of dumpster onsite.
Response: A dumpster can be set on the edge of the parking lot near the project site, in a location that will not block vehicular access.

21. A question was asked regarding Noise generation.
Response: The Town's Noise Ordinance allows for work from 7 AM to 7 PM.

22. A question was asked regarding ground water table.
Response: If ground water becomes an issue, the anticipated remedy would be a small dewatering pump.

23. A question was asked regarding will contractor be required to provide construction bathroom facilities.
Response: No, existing portable bathrooms are on site.

The foregoing represents the writer's best recollection of the discussions at this meeting. Should anyone take exception to or desire clarification of any portion of these minutes, they are requested to respond in writing within 5 days of receipt of these minutes.

Sincerely,
DAVIS, BOWEN & FRIEDEL, INC.

Joshua J. Taylor, PE
Associate

L:\0050A Berlin\0050A115 - Stephen Decatur Park Comfort Station Phase 2\Bidding\Pre-Bid Meeting\2022-08-31 Meeting Minutes.docx

cc: All Attendees

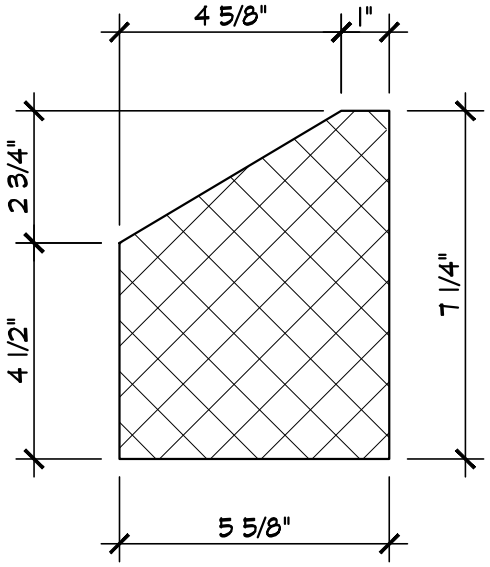

CMU SILL DIMENSIONS
SCALE 3" =1'-0"

DAVIS BOWEN & FRIEDEL, INC.
ARCHITECTS, ENGINEERS & SURVEYORS
EASTON ,MARYLAND ■ MILFORD, DELAWARE
410.770.4744 302.424.1441
SALISBURY,MARYLAND ■
410.543.9091

PROJECT:

STEPHEN DECATUR PARK
COMFORT STATION

THIS DRAWING, THE DESIGN AND CONSTRUCTION FEATURES DISCLOSED ARE PROPRIETARY TO DAVIS, BOWEN & FRIEDEL, INC., AND SHALL NOT BE ALTERED OR REUSED WITHOUT WRITTEN PERMISSION.

SUPPLEMENTAL DRAWING

Proj. No. 0050A115.A01

ADD–1

DATE:9/13/2022

SK NO: 1

SECTION 01 33 00

SUBMITTAL PROCEDURES

PART 1 - GENERAL

1.1 DESCRIPTION

Work Included:

A. Schedule of Values

B. Construction Schedule

C. Survey and Layout Data

D. Traffic Control Plan

E. Shop Drawings

F. Certificates of Compliance

G. Certified Payrolls

H. Record of Testing

I. Record Drawings

J. Samples

K. Construction Photographs

L. O&M Manuals

M. Release of Liens

N. Warranties and Guarantees

O. Characteristic Curves

PART 2 - PRODUCTS (Not Applicable)

PART 3 - EXECUTION

3.1 SCHEDULE OF VALUES

A. A schedule of values of the various parts of the work to be done under lump sum items shall be agreed upon by the Contractor and the ENGINEER. One week prior to the preconstruction conference, the Contractor shall submit for approval a proposed breakdown into construction categories of his lump sum price bid. This breakdown shall

add up to the full 100% value of the lump sum price, and all parts of it shall be covered by the performance bond. The approved breakdown shall be used for the purpose of arriving at a basis for monthly estimates for appropriate lump sum bid items.

3.2 CONSTRUCTION SCHEDULE

A. The construction schedule and chart shall be submitted to the ENGINEER for approval one week prior to the preconstruction conference. The general schedule will be discussed at the preconstruction meeting and copies made available to all interested parties. No construction shall be permitted until the construction schedule is approved.

B. The Contractor shall develop a critical path construction schedule and chart that shows at a minimum a bar graph indicating the series of activities either separately or concurrently required to complete the PROJECT within the allotted time. The chart shall also indicate expected cash flows on a monthly basis. Room shall be provided on the chart whereby the Contractor can plot actual progress of the work against that initially proposed.

C. The Contractor shall update the schedule on a monthly basis and submit the revised schedule to the ENGINEER along with the monthly pay request.

D. The Contractor shall furnish the ENGINEER at least five (5) days prior to the start of construction a final list of subcontractors which will be used on the PROJECT in accordance with Section 00 72 00 of these specifications.

3.3 SURVEY & LAYOUT DATA

A. The Contractor shall furnish the ENGINEER at least five days prior to the start of construction two record copies of line and grade stake out data. The furnishing of such record data, despite any action or lack thereof on the part of the ENGINEER relative to the data furnished, shall in no way release the Contractor from his responsibility for the completeness and accuracy of stake out work necessary for construction.

B. All survey and stake out work shall be done by qualified persons. Surveyor shall be licensed in the state where the PROJECT is located. The Contractor is responsible for stake out of all facilities required by this contract within the prices bid.

C. Any benchmarks destroyed through or as a direct result of the Contractor's construction operations shall be replaced and/or restored at his expense with no additional cost to the OWNER.

D. Work done by the Contractor without his having first established proper line and grade, or work done by him to incorrect line and grade, may be ordered removed and replaced at no increase in contract price.

3.4 TRAFFIC CONTROL PLAN

At least ten (10) days prior to the start of construction the Contractor shall furnish the ENGINEER a Traffic Control Plan in accordance with the most recent Maryland Manual on Uniform Traffic Control Devices for Streets and Highways, including the Part 6 Temporary Traffic Control.

3.5 SHOP DRAWINGS

A. The Contractor shall submit to the ENGINEER layout drawings for the installation and erection of the work and shop drawings for all fabricated or manufactured articles to be used in the work. The Contractor shall have three (3) copies prepared for submittal to the ENGINEER and shall prepare whatever additional copies as may be necessary or required for his own use and/or use by equipment suppliers and subcontractors.

B. All data, drawings, and correspondence from subcontractors, manufacturers, or suppliers shall be routed through the Contractor. The ENGINEER shall review only such data and details as are transmitted to him by the Contractor. All correspondence from the Contractor to the ENGINEER shall refer to the appropriate section of these specifications containing the subject matter of the inquiry.

C. Detailed shop drawings, shall include; as many of the following as applicable: drawing, detail, section, sub-part, paragraph, sub-paragraph, sub-sub-paragraph to specifically identifying where the submitted equipment can be found in the Contract Documents; detailed materials lists and dimensional drawings, data, and literature for fabricated materials or equipment to be incorporated in the work. Include method for mounting for equipment and any alternations required due to removal, replacement or repair of existing equipment. Include all specific data that may be required for ascertaining the excellence and character of the equipment and the space occupied. Shop drawings shall be submitted to the ENGINEER for review for general compliance with the Contract Documents before fabrication. The Contractor shall obtain and check manufacturers shop drawings, certified prints and other pertinent data for conformance with all requirements with the Drawings and Specifications and in ample time to permit satisfactory progress of the work. After a completion of such check and verification by the Contractor, the Contractor shall sign or stamp such drawings, which stamp shall state as follows:

CHECKED BY:_____
(Contractors Name)
SIGNED BY:_____
(Checkers Name)

D. All data, drawings, and correspondence from subcontractors, manufacturers, or suppliers shall be routed through the Contractor. The ENGINEER shall review only such data and details as are transmitted to him by the Contractor. All correspondence from the Contractor to the ENGINEER shall refer to the appropriate section of these specifications containing the subject matter of the inquiry.

E. The ENGINEER's review of layout and shop drawings will be only to verify general compliance with Contract Documents. Figure dimensions and other detail will not be checked. Any notation made on shop drawings by the ENGINEER shall be for the Contractor's guidance, but shall not relieve the Contractor from his responsibility to re-check, verify and resolve items so noted. The ENGINEERs review of shop drawings shall not relieve the Contractor from responsibility for errors or omissions thereon, whether or not called to the attention of the Contractor by the ENGINEER.

F. The Contractor's attention is specifically directed to the fact that no work shall be fabricated nor equipment or materials ordered nor any construction performed prior to approval by the ENGINEER of shop drawings applicable thereto. Construction performed in violation of this requirement will be neither approved nor certified for payment until applicable shop drawings have been submitted and approved. If any equipment or materials are ordered by the Contractor prior to submission and approval of shop drawings, he does so at his own risk.

G. The ENGINEER shall review at no charge to the Contractor shop drawings originally submitted and one re-submittal. Additional reviews resulting from improper submittal, lack of requested information, or disapproval shall be billed to the Contractor by the ENGINEER. The Contractor shall notify the ENGINEER in writing at the time of submission of any deviation in submittals from the requirements of the Contract Documents.

H. To expedite the return of shop drawings to the Contractor, the Contactor may need to pay extra for overnight delivery. The Contractor will be expected to provide his account number for such service and will be expected to include such costs within the base prices bid.

3.6 CERTIFICATES OF COMPLIANCE

Any certificates required for demonstrating proof of compliance of materials with Specifications requirements shall be executed in three (3) copies plus the number to be returned to the Contractor. Each certificate shall be signed by an authorized officer of the manufacturing company and shall contain the name and address of the Contractor, the PROJECT name and location, the quantity and date or dates of shipment or delivery to which the certificates apply. Copies of laboratory test reports submitted with certificates shall contain the name and address of the testing laboratory and the date or dates of the tests to which the report applies. Certification shall not be construed of relieving the Contractor from furnishing satisfactory material, if, after tests are performed on selected samples, the material is found not be meet the specific requirements.

3.7 CERTIFIED PAYROLLS

Certified payrolls are not required for this project.

3.8 RECORDS OF TESTING

A. The Contractor shall maintain records of all testing performed during the life of the PROJECT.

B. Records shall indicate the line, date of testing, persons involved in the testing and the results.

C. At the end of the PROJECT, or more frequently if requested, all testing records shall be turned over to the ENGINEER.

3.9 RECORD DRAWINGS

The Contractor shall keep one copy of the drawings at the site, in good order and provide mark-up to show all changes made during construction. These record drawings shall be available to the ENGINEER, and shall be delivered to him upon completion of the contract. Record drawings shall contain stationing of all valves, bends, and fittings or dimensions from structures. They shall also contain all as-built elevations. All survey and stake out work shall be done by qualified persons. Surveyor shall be licensed in the state where the PROJECT is located.

3.10 SAMPLES

A. The number and type of samples submitted shall be specified in the particular section to which they apply.

B. Samples shall be physical samples to illustrate the materials and workmanship. They shall be submitted in sufficient size and quantity to clearly illustrate the functional characteristics of the product or material, with integrally related parts and attachment devices, and the full range of color to be provided.

C. All samples shall have been checked by and stamped with the approval of the Contractor, identified clearly as to material, manufacturer and any pertinent catalog numbers indicating the intended use.

3.11 CONSTRUCTION PHOTOGRAPHS

A. Photographs shall be taken at each of the following stages of construction:

1. Before commencement of construction.
2. At one month intervals during construction of the facilities. Photographs of any month need only show the new work for that month.
3. Upon completion of construction.

B. Exterior photographs shall be taken from vantage points to view each structure and show all work adequately. Interior photographs shall be taken from vantage points to show all work. The number of photographs required at each monthly interval will be determined by the number of photographs needed to show all work adequately.

C. The Contractor shall deliver to the ENGINEER a CD with all pictures taken and three (3) sets of four 8" x 10" color photographs per month representing four different views selected by the OWNER or ENGINEER. The OWNER or ENGINEER will select photographs for enlargement from the monthly set of interior and exterior photographs supplied by the Contractor. The Contractor shall therefore maintain and catalog photograph negatives for later use in enlargements.

D. The photographs shall be clear and of high-quality resolution.

3.12 OPERATION & MAINTENANCE MANUALS

A. The Contractor shall furnish the ENGINEER six copies and digital portable document format (PDF) of a complete instruction manual for installation, operation, maintenance and lubrication of each component of mechanical and electrical equipment. The Contractor shall submit to the ENGINEER all manuals within thirty days after shop drawing approval,

in accordance with the requirements specified herein. The OWNER will retain a minimum of 5% of the contract price until after such time that operation and maintenance manuals have been submitted to the ENGINEER, reviewed for completeness and approved.

B. Manuals shall include operating and maintenance information on all systems and items of equipment. The data shall consist of catalogs; brochures; bulletins; charts; schedules; equipment numbers; wiring diagrams and assembly drawings which shall describe location, operation, maintenance, lubrication, and operating weight; lubrication charts showing manufacturer recommended lubricants for each rotating or reciprocating unit; and other necessary information for the OWNER to establish a complete maintenance program.

C. The following items shall also be submitted:

1. Complete name plate data including serial number for each piece of equipment.
2. Manufacturer's cuts and dimensional drawings of each piece of equipment and details of all replacement parts.
3. Manufacturer's name, address and phone number for service and parts along with the name, address and phone number of the nearest service representative for the manufacturer.
4. A list of spare parts including part numbers and other information needed to order parts.
5. Complete electrical wiring diagrams.
6. Routine maintenance schedule including lubrication, adjustments, inspections, calibrations, etc. and a list of acceptable equivalent lubricants which are available locally.
7. Written warranties. Each written warranty shall be certified to extend the warranty to the length of time covered under the Contractor's one year guaranteed period.

D. Operation and maintenance manuals shall be bound within a three ring type plastic coated binder. Maximum size shall be 8-1/2" x 11 x 2-1/2". Multiple binders shall be labeled and organized into volumes. Each volume shall be labeled and organized into sections. Each section shall be for only one piece of equipment. Each section shall include as a minimum, installation, operation, maintenance, and lubrication data for the equipment item. Section dividers shall be clearly labeled with tabs and permanent lettering. Each binder shall be D-ring type with clear plastic pockets for full length and width of spline and cover, and sheet lifters. Provide and insert custom, full insertion label for spine and cover. Coordinate with OWNER for design of labels.

E. Provide two additional copies of specific equipment manuals at least two weeks prior to operation and training.

3.13 RELEASE OF LIENS

Affidavits of payments of all bills related to the PROJECT, release of liens, bonding company approvals and consent of surety to final payment.

3.14 WARRANTIES AND GUARANTEES

The Contractor shall provide all release of liens, warrantees, guarantees, bonds, and affidavits required for equipment and the total PROJECT in accordance with these specifications. The Contractor shall provide a Release of Liens from all subcontractors and material suppliers.

END OF SECTION

SECTION 07 27 00 – AIR & VAPOR BARRIER
PART 1 - GENERAL

1.1 SUMMARY

A. Section Includes:

1. Silicone Air & Vapor Barrier.
2. Silicone Flashing
3. Reinforcing Fabric

1.2 ACTION SUBMITTALS

A. Product Data: For each type of product.
B. INFORMATIONAL SUBMITTALS
C. Evaluation Reports: For water-resistive barrier, from ICC-ES.

PART 2 - PRODUCTS

2.1 Air Barrier

A. Silicon Air Barrier: Basis of Design - Hohmann & Barnard, Inc., Enviro-Barrier Silicone
B. Silicon Flashing: Basis of Design – Enviro-Barrier Liquid Flash Silicone
C. Control Joints: Basis of Design – Enviro-Barrier Silicone TS
D. Reinforcing Fabric: Basis of Design – Enviro -Barrier Reinforcing Fabric

PART 3 - EXECUTION

3.1 Air Barrier Installation

A. General: All exterior plywood sheathing is to be treated with the silicone air barrier. Substrates are to be clean, dry and frost free. Application can take place in temperatures as low as 0 degrees Fahrenheit, however the substrate must be dry.

1. Place reinforcing fabric over/at rough openings, inside/ outside corners, flashings, penetrations, transitions, and changes in plains.
2. Apply liquid flashing over reinforcing fabric before coating entire surface with silicone air barrier.
3. Apply silicon air barrier to a wet film mil thickness of 20. 1 or 2 coats may be used to achieve this thickness. Minimum dry film thickness is to be 17 mils.
4. Comply with manufacturer's written instructions and warranty requirements.

END OF SECTION 07 27 00

Halsey Taylor
SPECIFICATIONS

Halsey Taylor HydroBoost Vandal-Resistant Bottle Filling Station & Bi-Level Reverse ADA Cooler Non-Filtered Refrigerated Stainless
Model HTHBHVR8BLR-NF

PRODUCT SPECIFICATIONS

Halsey Taylor HydroBoost® Vandal-Resistant Bottle Filling Station & Bi-Level Reverse ADA Cooler Non-Filtered Refrigerated Stainless. Chilling Capacity of 8.0 GPH (gallons per hour) of 50° F drinking water, based on 80° F inlet water and 90° F ambient, per ASHRAE 18 testing. Features shall include Green Counter™, Laminar Flow, Real Drain, Vandal Resistant. Furnished with Vandal Resistant bubbler. Electronic Bottle Filler Button with Mechanical Front Bubbler Button activation. Product shall be Wall Mount (On Wall), for Indoor + Outdoor applications, serving 2 station(s). Unit shall be certified to UL 399 and CAN/CSA C22.2 No. 120. Unit shall be lead-free design which is certified to NSF/ANSI 61 & 372 (lead free) and meets Federal and State low-lead requirements.

Special Features:	Green Counter™, Laminar Flow, Real Drain, Vandal Resistant
Finish:	Stainless Steel
Power:	115V/60Hz
Bubbler Style:	Vandal Resistant
Activation by:	Electronic Bottle Filler Button with Mechanical Front Bubbler Button
Mounting Type:	Wall Mount (On Wall)
Chilling Capacity*:	8.0 GPH
Full Load Amps	1
Rated Watts:	370
Dimensions (L x W x H):	36-1/8" x 18-5/8" x 38-13/16"
Approx. Shipping Weight:	118 lbs.
Installation Location:	Indoor + Outdoor
No. of Stations Served:	2
*Based on 80° F inlet water & 90° F ambient air temp for 50° F chilled drinking water.	
**When used in non-temperature controlled environments, unit(s) must be adequately winterized and/or protected from extreme heat to prevent damage where climates dictate.	

- Mechanically-Activated bubbler continues to supply water in event of service disruptions.
- Green Counter: Informs user of number of 20 oz. plastic water bottles saved from waste.
- Laminar flow provides clean fill with minimal splash.
- Real Drain System eliminates standing water.

COOLING SYSTEM

- Compressor: Hermetically-sealed, reciprocating type, single phase. Sealed-in lifetime lubrication.
- Condenser: Fan cooled, copper tube with aluminum fins. Fan motor is permanently lubricated.
- Cooling Unit: Combination tube-tank type. Continuous copper tubing with is fully insulated with EPS foam that meets UL requirements for self-extinguishing material.

PART:_____QTY: _____

PROJECT:_____

CONTACT:_____

DATE:_____

NOTES:_____

APPROVAL:_____

Included with Product: **Water Cooler (CLR-HTHBHVR8BLR-NF), Bottle Filler (HVRHTHB-NF)**

▼ Ships in multiple boxes.

AMERICAN PRIDE. A LIFETIME TRADITION.
Like your family, the Elkay family has values and traditions that endure. For almost a century, Elkay has been a family-owned and operated company, providing thousands of jobs that support our families and communities.

PRODUCT COMPLIANCE

ADA & ICC A117.1
ASME A112.19.3/CSA B45.4
Buy American Act
CAN/CSA C22.2 No. 120
GreenSpec®
NSF/ANSI 61 & 372 (lead free)
UL 399

Complies with ADA & ICC A117.1 accessibility requirements when installed according to the requirements outlined in these standards. Installation may require additional components and/or construction features to be fully compliant. Consult the local Authority Having Jurisdiction if necessary.

Installation Instructions (PDF)

5 Year Limited Warranty on the refrigeration system of the unit. Electrical components and water system are warranted for 12 months from date of installation. **Warranty pertains to drinking water applications only. Non-drinking water applications are not covered under warranty.**

Warranty (PDF)

In keeping with our policy of continuing product improvement, Halsey Taylor reserves the right to change product specifications without notice. Please visit Halseytaylor.com for the most current version of Halsey Taylor product specification sheets. This specification describes a Halsey Taylor product with design, quality, and functional benefits to the user. When making a comparison of other producers' offerings, be certain these features are not overlooked.

- Refrigerant Control: Refrigerant R-134a is controlled by accurately calibrated capillary tube.
- Temperature Control: Easily accessible enclosed adjustable thermostat is factory preset. Requires no adjustment other than for altitude requirements.

Optional Accessories		
HWF3000	Halsey Taylor WaterSentry Plus Filter Kit (Bottle Fillers) Spec Sheet (PDF)	
MLP200	In-wall Carrier for Bi-level On-wall Bottle Fillers, Coolers & Fountains Spec Sheet (PDF)	
98324C	Accessory - Cane Apron for HAC HVR EMABF & VRC Models (Stainless) Spec Sheet (PDF)	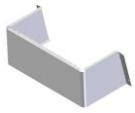
36292C	Accessory - Power Block for Multistation Bottle Filling Stations Spec Sheet (PDF)	

In keeping with our policy of continuing product improvement, Halsey Taylor reserves the right to change product specifications without notice. Please visit Halseytaylor.com for the most current version of Halsey Taylor product specification sheets. This specification describes a Halsey Taylor product with design, quality, and functional benefits to the user. When making a comparison of other producers' offerings, be certain these features are not overlooked.

IMPORTANT!
INSTALLER PLEASE NOTE :

This water cooler has been designed and built to provide water to the user which has not been altered by materials in the cooler waterways. The grounding of electrical equipment such as telephone, computer, etc. to water lines is a common procedure. The grounding may be in the building but may also occur away from the building. This grounding can cause electrical feedback into a water cooler creating an electrolysis which creates a metallic taste or causes an increase in the metal content of the water. This condition is avoidable by installing the cooler using the proper materials as shown below.

NOTICE

This water cooler must be connected to the water supply using a dielectric coupling. The cooler is furnished with a non-metallic strainer which meets this requirement. The drain trap which is provided by the installer should also be plastic to completely isolate the cooler from the building plumbing system.
Bottle filler unit on bracket attached to wall by 6 holes (as shown). Water and electrical will connect through pre-punched hole in basin.

OPERATION OF QUICK CONNECT FITTINGS

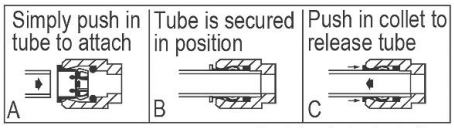

Pushing tube in before pulling it out helps to release tube

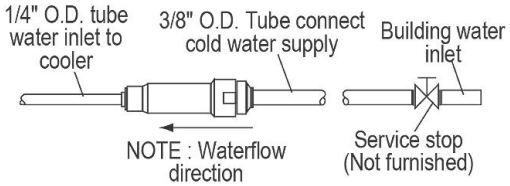

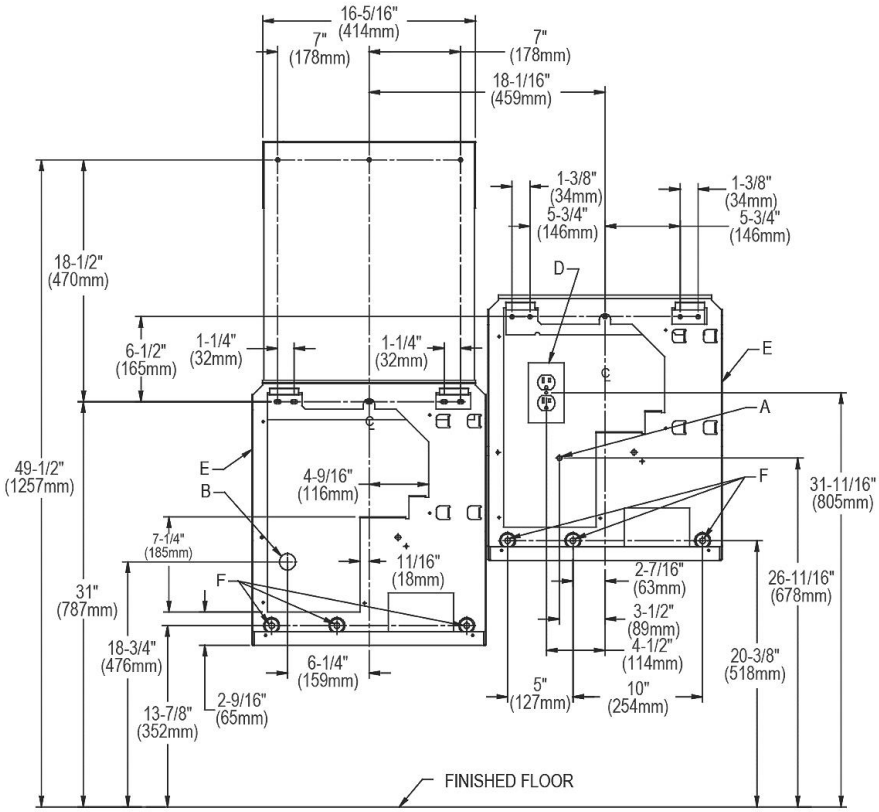

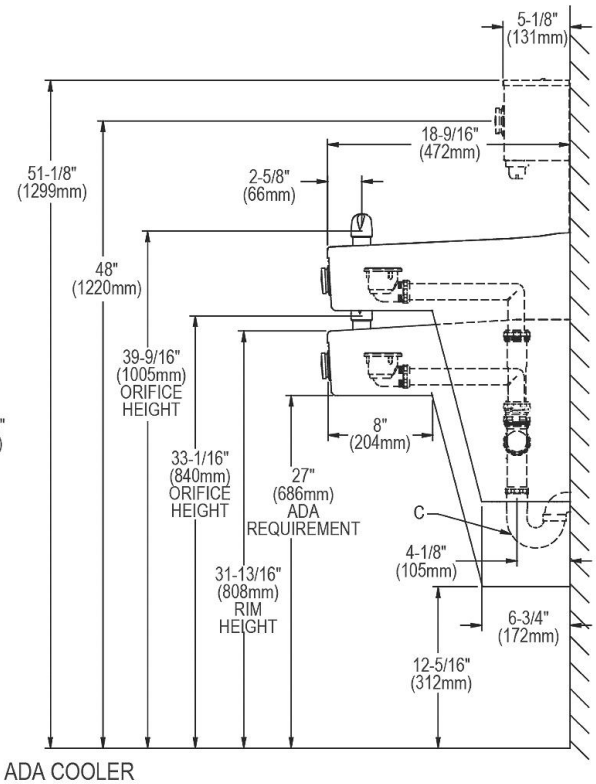

REDUCE HEIGHT BY 3" FOR INSTALLATION OF CHILDREN'S ADA COOLER

LEGEND:
A = Recommended Water Supply location. Shut-off Valve (not furnished) to accept 3/8" O.D. unplated copper tube. Up to 3" (76mm) maximum out from wall.
B = Recommended Waste Outlet location. To accommodate 1-1/2" nominal drain. Drain stub 2" (51mm) out from wall.
C = 1-1/2" Trap (not furnished).
D = Electrical Supply (3) Wire Recessed Box Duplex Outlet.
E = Insure proper ventilation by maintaining 6" (152mm) minimum clearance from cabinet louvers to wall.
F = 7/16" (11mm) Bolt Holes for fastening to wall.
Note : New Installations Must Use Ground Fault Circuit Interrupter (GFCI). It is highly recommended that the circuit be dedicated and the load protection be sized for 20 amps.

In keeping with our policy of continuing product improvement, Halsey Taylor reserves the right to change product specifications without notice. Please visit Halseytaylor.com for the most current version of Halsey Taylor product specification sheets. This specification describes a Halsey Taylor product with design, quality, and functional benefits to the user. When making a comparison of other producers' offerings, be certain these features are not overlooked.

Printed and electronic or email submittals will be accepted. Regardless of the delivery method, it is the responsibility of the bidder to ensure delivery by the deadline.

- If printed, the Town encourages double-sided printing where appropriate. Complete submission should not exceed 20 sheets of paper and must be in a sealed envelope addressed to

  Town of Berlin RFP 2023-04
  Attn: M. Bohlen, Acting Town Administrator
  10 William Street
  Berlin, MD 21811

- If electronic (via USB drive), USB must be clearly labeled: "TOB RFP 2023-04"
- If via email, send to mbohlen@berlinmd.gov with the subject "RFP 2023-04 Stephen Decatur Park Comfort Station Project".

• **PROPRIETARY PROPOSAL MATERIAL:** Any proprietary information revealed in the proposal should be clearly identified as such.

• **SIGNATURES:** Proposal shall be signed by one of the legally authorized officers of said corporation. If awarded the contract, the Contract shall also be so executed.

DEADLINES AND IMPORTANT DATES:

Wednesday, August 31, 2022, 10:00 AM – NON-MANDATORY Pre-Bid Meeting: Pre-bid Meeting shall be held at Town Hall, 10 William Street, Berlin, MD 21811 and will be followed by site visit(s) if requested.

Tuesday, September 13, 2022, by 4:30 PM – Deadline to submit questions: Questions from potential Bidders are due via email to mbohlen@berlinmd.gov. Please note: With the exception of questions asked during site visit(s), questions received after this deadline, and questions that are phoned, faxed, sent through regular mail, or submitted via any other method or to any other email address will not be accepted. Oral responses or responses to questions submitted in any other format or to any other person will be non-binding. Individual responses to questions will not be provided; all questions and answers will be compiled into one document to be posted as indicated below.

Friday, September 16, 2022, by 5:00 PM – Posting of responses: Responses to questions from potential Bidders will be posted at the following link by the deadline. It is the responsibility of potential Bidders to visit the website for this information http://berlinmd.gov/government/request-for-proposals/.

Wednesday, September 28, 2022, by 10:00 AM – Due Date for Proposals: Proposals shall be submitted per the Submittal Requirements as indicated on the preceding page(s) and must be received by the deadline, at which time proposals will be publicly opened and read aloud at Berlin Town Hall, 2nd Floor Conference Room, 10 William Street, Berlin, MD 21811. Proposals received after that date and time will not be considered. Regardless of the delivery method, it is the responsibility of the bidder to ensure delivery by the deadline.

DOOR SCHEDULE

NO	DOOR				FRAME					HRDW SET	NOTES
	SIZE	TYPE	MATL	GLAZ	TYPE	MATL	SILL	HEAD	JAMB		
A101	3'-0" x 7'-0" x 1 3/4"	A	HM	--	1	HM	6/A3.2	4/A3.2	5/A3.2	01	INSULATED
A102	3'-0" x 7'-0" x 1 3/4"	A	HM	--	1	HM	6/A3.2	4/A3.2	5/A3.2	03	INSULATED
A103	3'-0" x 7'-0" x 1 3/4"	A	HM	--	1	HM	6/A3.2	4/A3.2	5/A3.2	02	INSULATED

WINDOW & LOUVER SCHEDULE

NO	WINDOW UNIT				FRAME					UL LABEL	HRDW SET	NOTES
	WIDTH	HEIGHT	TYPE	MATL	TYPE	MATL	SILL	HEAD	JAMB			
A	2'-8"	2'-0"	A	VIN	1	VIN	3/A3.2	1/A3.2	2/A3.2	--	--	JELD-WIN V-2500 FIXED PICTURE
A	2'-8"	2'-0"	A	VIN	1	VIN	3/A3.2	1/A3.2	2/A3.2	--	--	JELD-WIN V-2500 FIXED PICTURE
B	1'-4"	1'-4"	B	AL	2	AL	--	--	--	--	--	Construction Specialties RS-4700, KYNAR FINISH
B	1'-4"	1'-4"	B	AL	2	AL	--	--	--	--	--	Construction Specialties RS-4700, KYNAR FINISH

DR & WIND SCHD NOTES

HARDWARE SET NO. 1
1 RAIN GUARD
1 LEVER PRIVACY LOCKSET
1 DEADBOLT
1 CLOSER
1 ADA AL THRESHOLD
1 WEATHER STRIP
1 APPLIED DOOR SWEEP
1 MAGNETIC LOCK 1,200#, POWER SUPPLY, 24 HR TIMER, FREE EXIT
1 MOP PLATE
1 SMART PAC BRIDGE RECTIFIER
3 BUTT BB 4.5" HINGES NRP X 32D

HARDWARE SET NO. 2
1 RAIN GUARD
1 LEVER PRIVACY LOCKSET
1 DEADBOLT
1 CLOSER
1 ADA AL THRESHOLD
1 WEATHER STRIP
1 APPLIED DOOR SWEEP
1 MAGNETIC LOCK, 1,200#, POWER SUPPLY, 4 HR TIMER, FREE EXIT
1 MOP PLATE
1 SMART PAC BRIDGE RECTIFIER
3 BUTT BB 4.5" HINGES NRP X 32D

HARDWARE SET NO. 3
1 RAIN GUARD
1 LEVER STOREROOM LOCKSET
1 ADA AL THRESHOLD
1 WEATHER STRIP
1 APPLIED DOOR SWEEP
3 BUTT BB 4.5" HINGES NRP X 32D

JELD-WIN V-2500 WINDOW
INTEGRAL NAILING FIN
TEMPERED SUNRESIST LOW-E INSULATING GLASS
CLEAR GLASS, NO TINT
NO GRILLE
WHITE / WHITE

G1 DOOR & WINDOW SCHEDULES

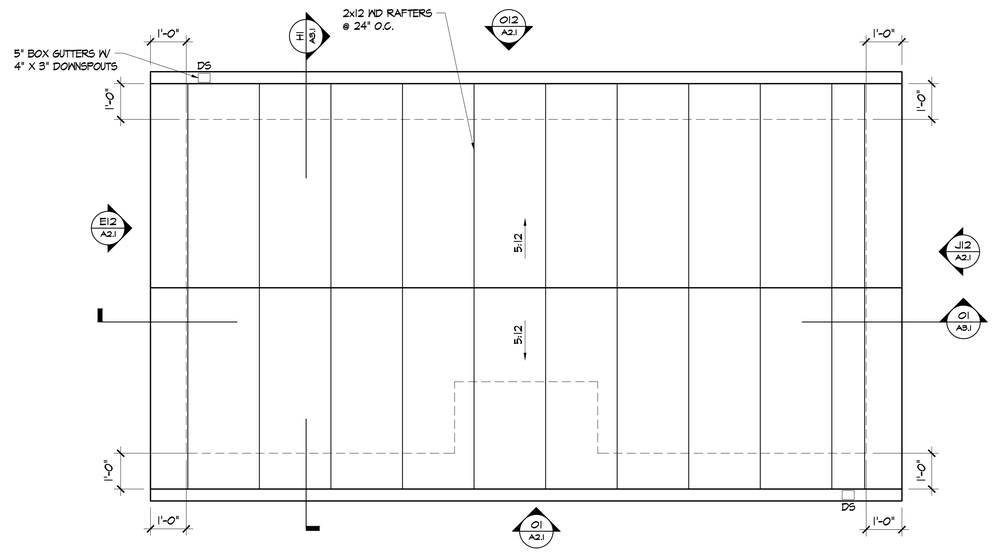

G10 ROOF PLAN

1/2" = 1'-0"

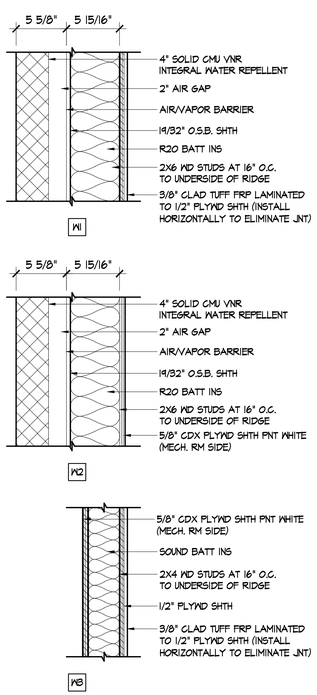

01 WALL TYPES

1 1/2" = 1'-0"

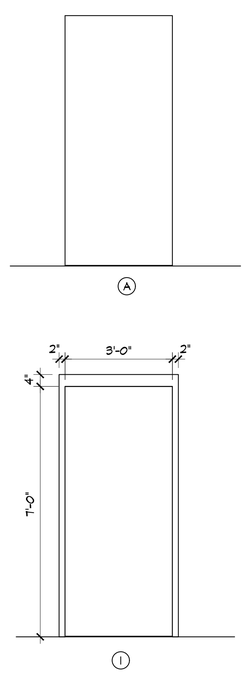

05 DOOR & FRAME TYPES

1/2" = 1'-0"

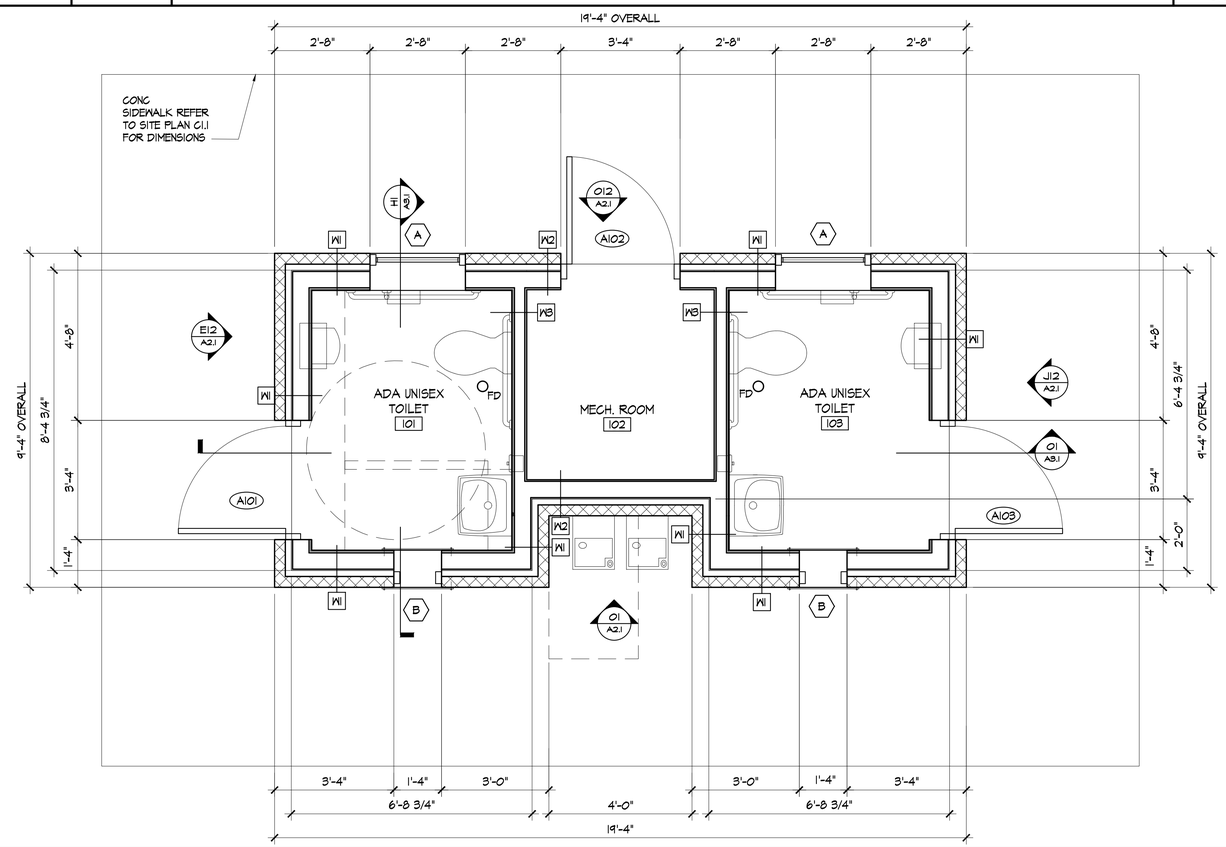

09 FLOOR PLAN

1/2" = 1'-0"

DAVIS BOWEN & FRIEDEL, INC.
ARCHITECTS · ENGINEERS · SURVEYORS
EASTON, MARYLAND 410.770.4744 | MILFORD, DELAWARE 302.424.1444 | SALISBURY, MARYLAND 410.543.9091

General Notes:

1. THESE DRAWINGS ARE PROVIDED FOR THE EXCLUSIVE USE OF THE TOWN OF BERLIN. OWNER/ARCHITECT SERVICES AGREEMENT IS FOR ARCHITECTURAL DRAWINGS REQUIRED FOR PERMIT & APPROVAL ONLY. EXTENSIVE DRAWINGS SPECIFICATIONS ARE NOT PART OF THE OWNER/ARCHITECT AGREEMENT.
2. THE CONTRACTOR SHALL VERIFY ALL SITE CONDITIONS AND DIMENSIONS BEFORE CONSTRUCTION. ANY VARIATION OR DISCREPANCIES SHALL BE BROUGHT TO THE ARCHITECT'S ATTENTION PRIOR TO CONSTRUCTION.
3. ANY CHANGE OR FIELD ALTERATION SHALL BE BROUGHT TO THE ATTENTION OF THE ARCHITECT PRIOR TO CONSTRUCTION.
4. ANY ITEMS NOT SPECIFICALLY SHOWN ON THE DRAWINGS, BUT WHICH ARE REASONABLY INCIDENTAL TO AND NECESSARY FOR THE SATISFACTORY COMPLETION OF THE PROJECT IN ACCORDANCE WITH INDUSTRY STANDARDS, ARE INCLUDED WITHIN THE INTENT OF THESE DRAWINGS.
5. BUILDING CODE COMPLIANCE, CONSTRUCTION, DETAILING AND COORDINATION RESULTING FROM THE USE OF THESE DRAWINGS SHALL BE THE RESPONSIBILITY OF THE CONTRACTOR.
6. ALL CONSTRUCTION SHALL BE IN ACCORDANCE WITH STANDARDS ESTABLISHED IN THE 2018 INTERNATIONAL BUILDING CODE.

Consultant:

Revision

	Addendum #1	

Project:

STEPHEN DECATUR PARK COMFORT STATION

BERLIN, MARYLAND

Set: Addendum #1

Sheet Title: FLOOR PLAN, ROOF PLAN, WALL & DOOR TYPES, SCHEDULES

Proj.No.: 0050A115.A01 | Scale: AS NOTED | Sheet No.: A1.1

Dwn.By: EHC | Date: 7/19/2022

THIS DRAWING, THE DESIGN AND CONSTRUCTION FEATURES DISCLOSED ARE PROPRIETARY TO DAVIS, BOWEN & FRIEDEL, INC., AND SHALL NOT BE ALTERED OR REUSED WITHOUT WRITTEN PERMISSION.

COPYRIGHT © 2022

\\Atlas\sa\ARCH\0050\0050A115.A01 Toilet SDP\4-Cd\AutoCAD\Drawings\A1.dwg Aug 30, 2022 - 2:06pm

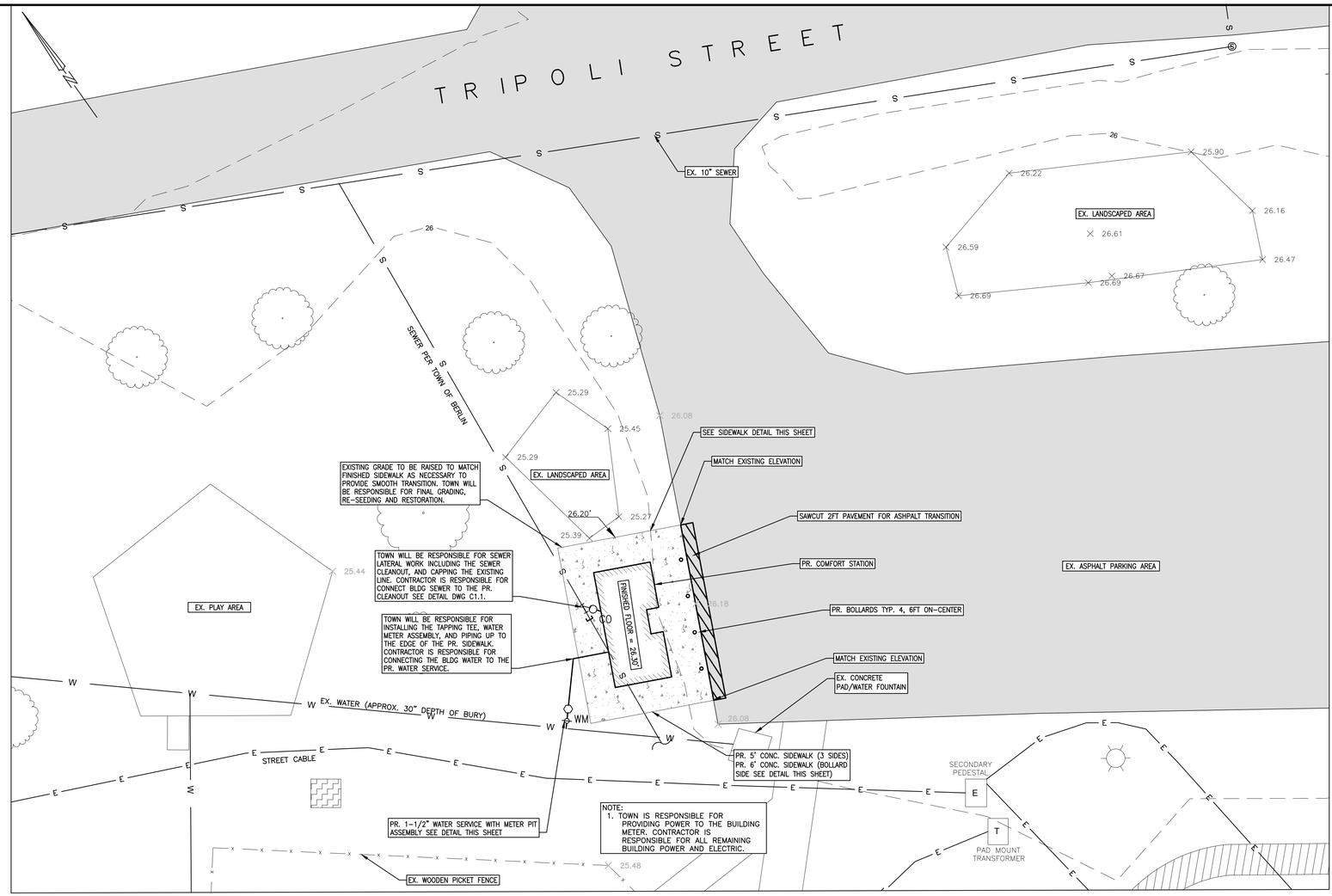

PROPOSED SITE PLAN

1"=10'

0' 10' 20' 30'

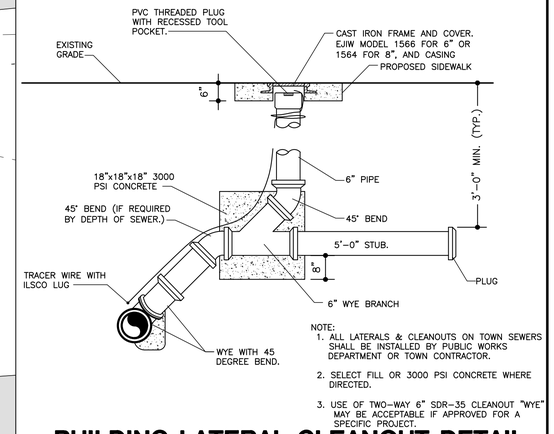

NOTE:
1. ALL LATERALS & CLEANOUTS ON TOWN SEWERS SHALL BE INSTALLED BY PUBLIC WORKS DEPARTMENT OR TOWN CONTRACTOR.
2. SELECT FILL OR 3000 PSI CONCRETE WHERE DIRECTED.
3. USE OF TWO-WAY 6" SDR-35 CLEANOUT "WYE" MAY BE ACCEPTABLE IF APPROVED FOR A SPECIFIC PROJECT.

BUILDING LATERAL CLEANOUT DETAIL

NOT TO SCALE TOWN INSTALLED

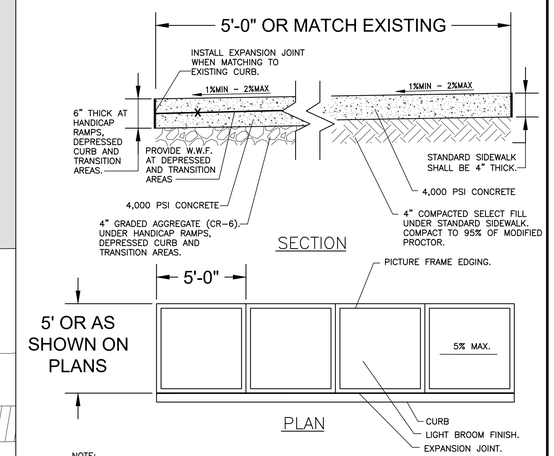

NOTE:
1. CONTROL JOINTS SPACING TO MATCH WIDTH OF SIDEWALK. EXPANSION JOINT TO BE 20' O.C.
2. CONCRETE SHALL BE 4,000 PSI.
3. MAXIMUM SLOPE IN THE THE DIRECTION OF TRAVEL SHALL BE 5% IN LOCATIONS WITHOUT ADA COMPLIANT RAMPS.
4. SIDEWALKS SHALL COMPLY WITH ADA REQUIREMENTS PER MOST UP TO DATE DEPARTMENT OF JUSTICE REGULATIONS 28 CFR PART 36.

SIDEWALK DETAIL

NOT TO SCALE

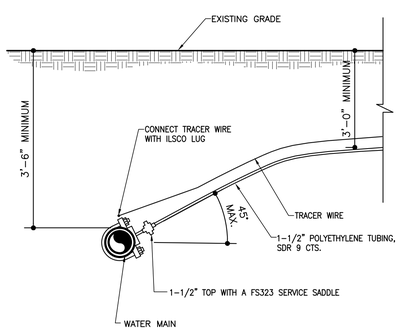

NOTES:
1. SEE SPECIFIC METER DETAILS FOR ADDITIONAL REQUIREMENTS AND INFORMATION.
2. DO NOT TORQUE SADDLE WITHOUT PRESSURE IN MAIN.
3. TAPPING TOOL SHALL USE SHELL TYPE CUTTER WHICH RETAINS THE COUPON AND CHIPS. CONTRACTOR TO PROVIDE COUPONS TO RPR FOR EACH SERVICE.
4. EACH SERVICE SHALL BE BLOWN OFF PRIOR TO CONNECTION TO THE METER PIT.

WATER SERVICE TAP DETAIL

NOT TO SCALE TOWN INSTALLED

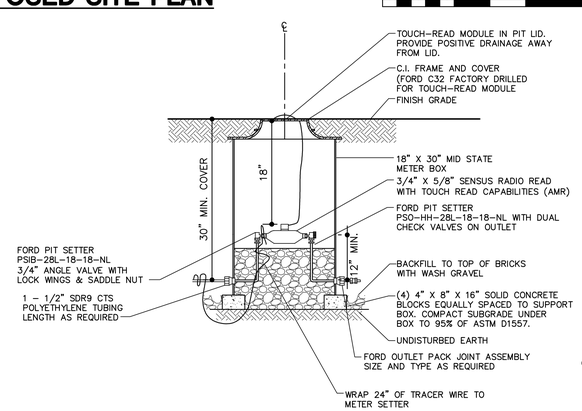

NOTES:
1. DO NOT INSTALL WATER METERS IN DRIVEWAYS OR SIDEWALKS.
2. FIRE SERVICE SHALL BE PROVIDED SEPARATELY.
3. CONTRACTOR TO VERIFY FIT & COMPATIBILITY OF ALL PIPING, FITTINGS, AND CONNECTIONS PRIOR TO ORDERING MATERIALS.

CURB STOP & METER ASSEMBLY DETAIL

NOT TO SCALE TOWN INSTALLED

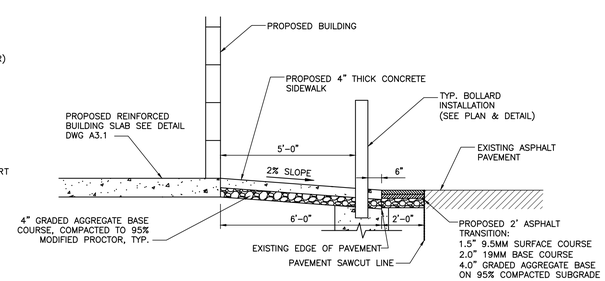

SIDEWALK TIE-IN DETAIL

NOT TO SCALE

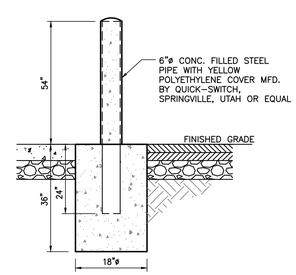

TYPICAL BOLLARD

NOT TO SCALE

DAVIS BOWEN & FRIEDEL, INC.
ARCHITECTS · ENGINEERS · SURVEYORS
EASTON, MARYLAND 410.770.4744
MILFORD, DELAWARE 302.424.1444
SALISBURY, MARYLAND 410.543.9091

General Notes:

Consultant:

Professional Certification. I hereby certify that these documents were prepared or approved by me, and that I am a duly licensed Professional Engineer under the laws of the State of MD License No. 42581, Expiration Date: 6-13-24

Revision		
Addendum #1		

Project:

STEPHEN DECATUR PARK COMFORT STATION

BERLIN, MARYLAND

Set: Addendum #1	Sheet Title: PROPOSED SITE PLAN
Proj. No.: 0050A115.A01	Scale: AS NOTED
Dwn. By: NSB	Date: AUGUST /2022
Sheet No.: C.1	

THIS DRAWING, THE DESIGN AND CONSTRUCTION FEATURES DISCLOSED ARE PROPRIETARY TO DAVIS, BOWEN & FRIEDEL, INC., AND SHALL NOT BE ALTERED OR REUSED WITHOUT WRITTEN PERMISSION.

COPYRIGHT © 2022

L:\0050A Berlin\0050A115 - Stephen Decatur Park Comfort Station Phase 2\Design\DWG\Print Sheet\C-101.dwg Sep 14, 2022 - 9:26am